*Confidential property of Kazel Hydraulic,Türkiye.
*Drawing cannot be shared with third-party

REV	REV DATE	DESCRIPTION	

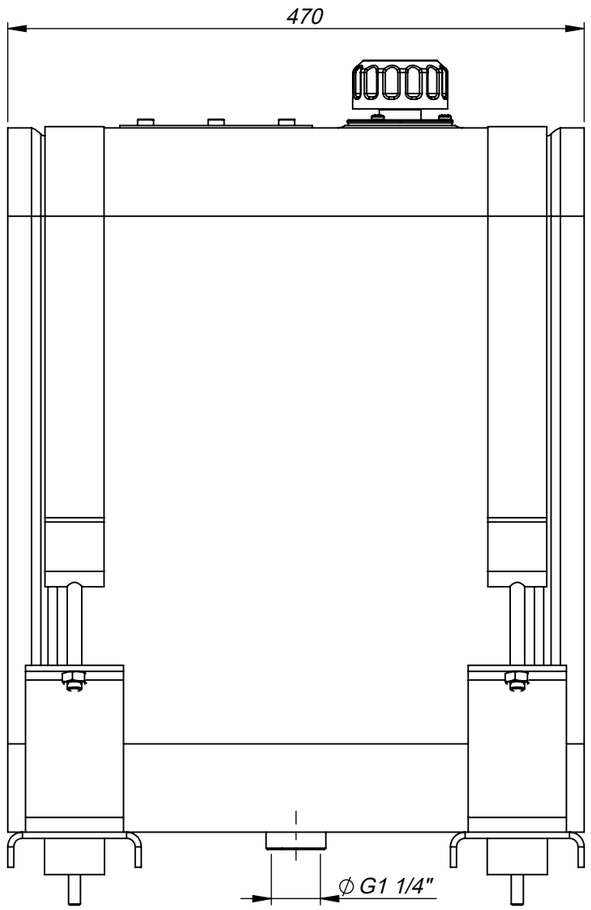

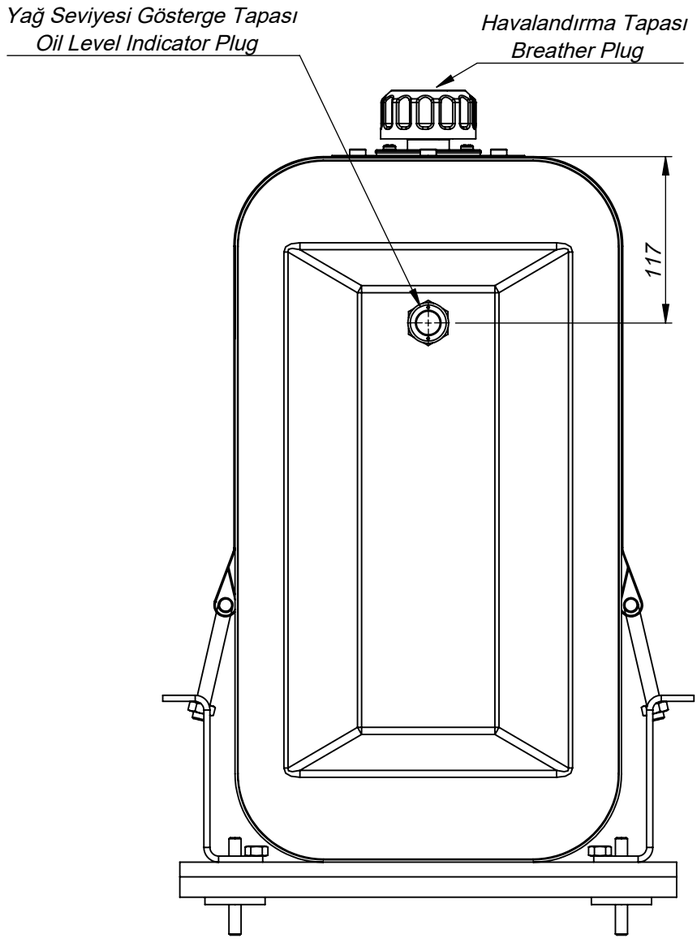

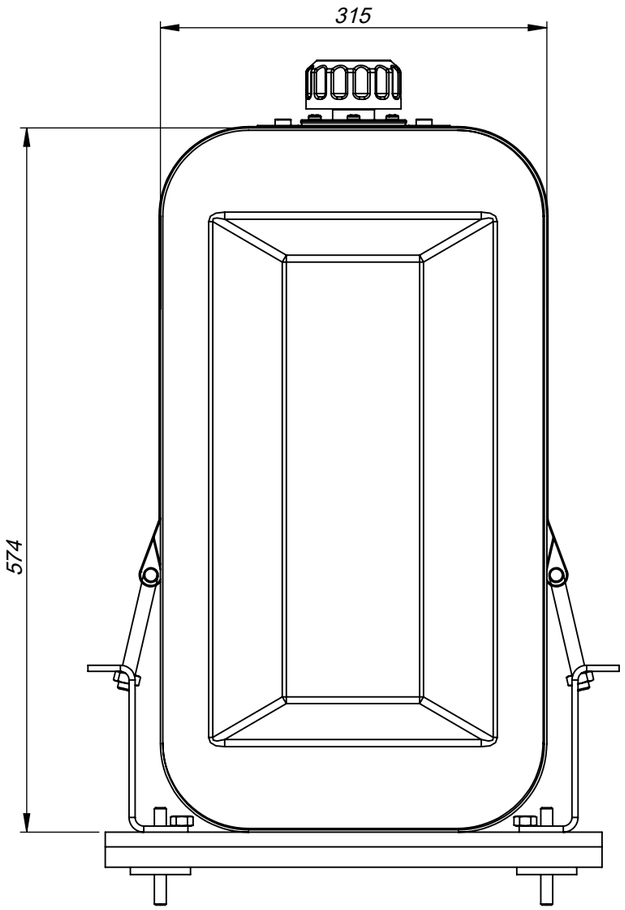

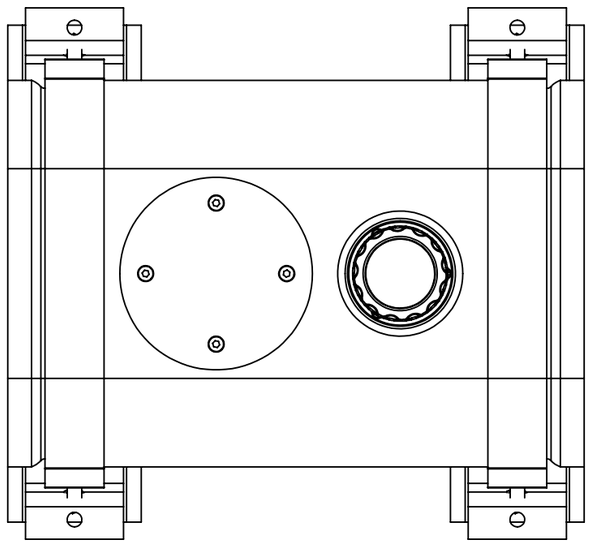

		NAME-SURNAME	DATE	SİGNATURE
DRAWER		A.AKGÖZ	02.03.2021	
CONTROL		A.DOĞAN	02.03.2021	
APPROVAL		M.KAZEL	02.03.2021	
SCALE	1:5	PRODUCT NAME:70 LT TANK		

KAZEL
HYDRAULIC EQUIPMENTS